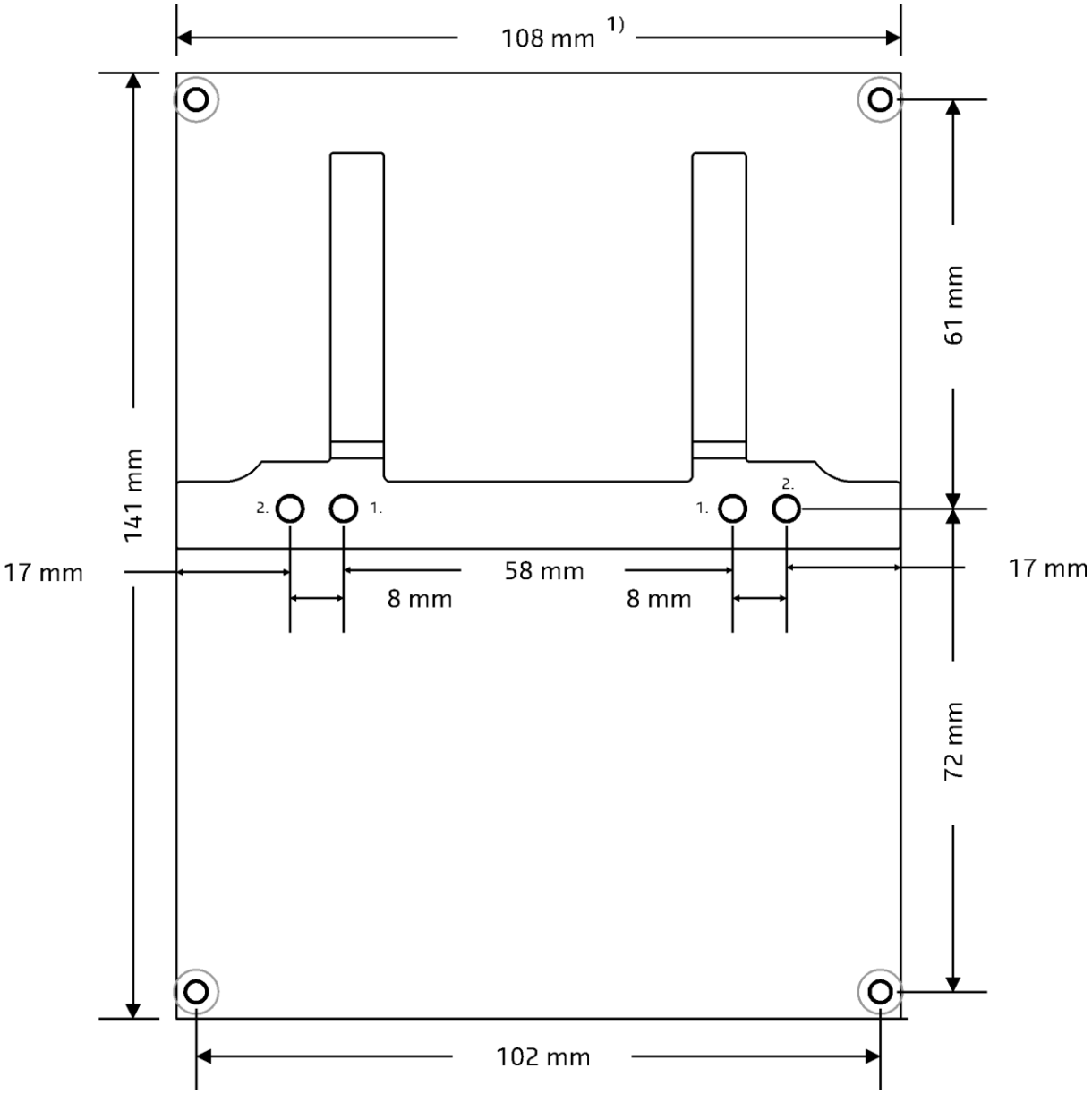

1. Metric M5
2. UNC 10-24

Note 1: UcD2k up to V3 is 110mm. V4 is changed to fit 4 pieces in 19” cases.